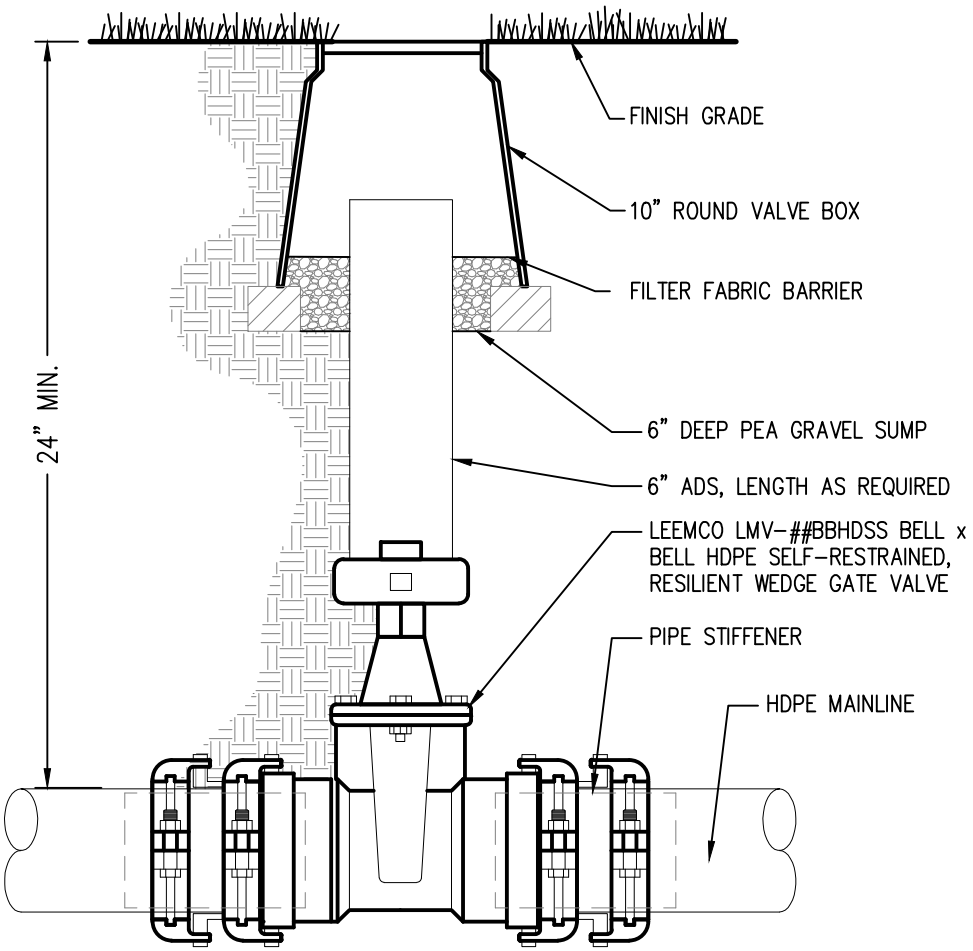
FINISH GRADE
10" ROUND VALVE BOX
FILTER FABRIC BARRIER
6" DEEP PEA GRAVEL SUMP
6" ADS, LENGTH AS REQUIRED
LEEMCO LMV-##BBHDSS BELL x
BELL HDPE SELF-RESTRAINED,
RESILIENT WEDGE GATE VALVE
PIPE STIFFENER
HDPE MAINLINE
24" MIN.