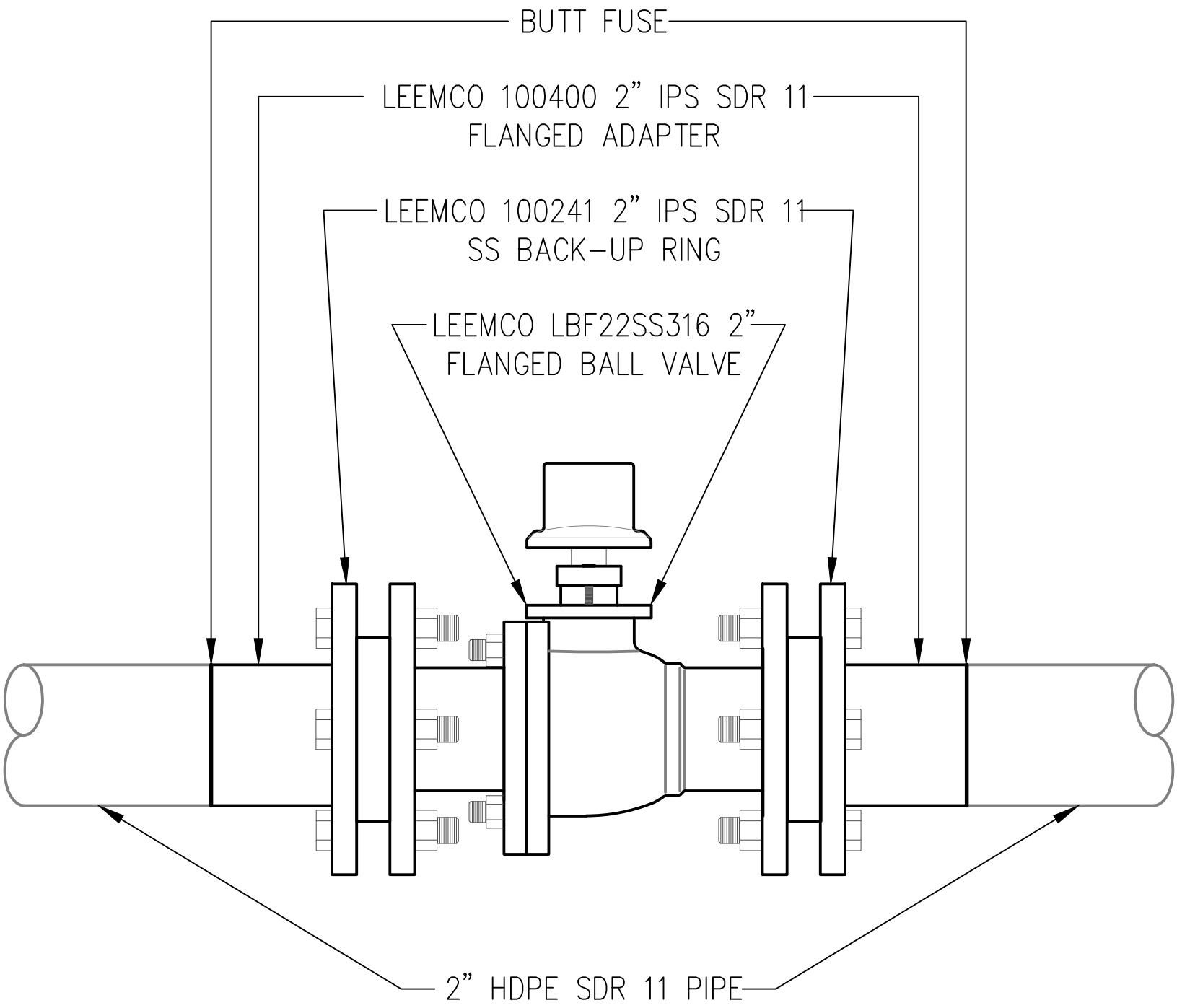
BUTT FUSE
LEEMCO 100400 2" IPS SDR 11
FLANGED ADAPTER
LEEMCO 100241 2" IPS SDR 11
SS BACK-UP RING
LEEMCO LBF22SS316 2"
FLANGED BALL VALVE
2" HDPE SDR 11 PIPE