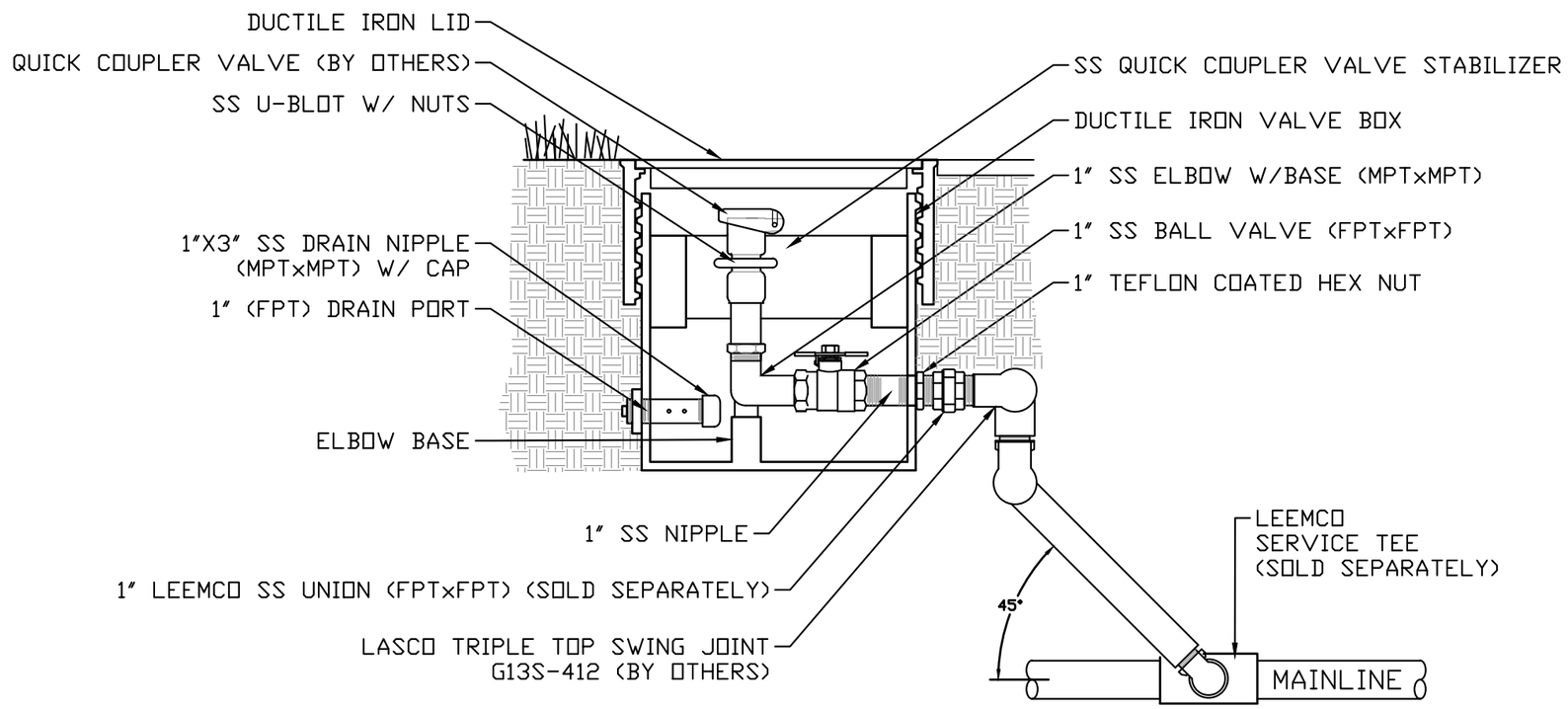
DUCTILE IRON LID
QUICK COUPLER VALVE (BY OTHERS)
SS U-BLOT W/ NUTS
1"X3" SS DRAIN NIPPLE (MPTxMPT) W/ CAP
1" (FPT) DRAIN PORT
ELBOW BASE
1" SS NIPPLE
1" LEEMCO SS UNION (FPTxFPT) (SOLD SEPARATELY)
LASCO TRIPLE TOP SWING JOINT G13S-412 (BY OTHERS)
SS QUICK COUPLER VALVE STABILIZER
DUCTILE IRON VALVE BOX
1" SS ELBOW W/BASE (MPTxMPT)
1" SS BALL VALVE (FPTxFPT)
1" TEFLON COATED HEX NUT
LEEMCO SERVICE TEE (SOLD SEPARATELY)
45°
MAINLINE